Protective Housing
for Light Curtain Pick-to-Light

ZNNS003

Part Number

Technical Data

Mechanical Data	
Material	Stainless Steel
Packaging unit	1 Piece

- **For light curtain pick to light OLEB122C0102**

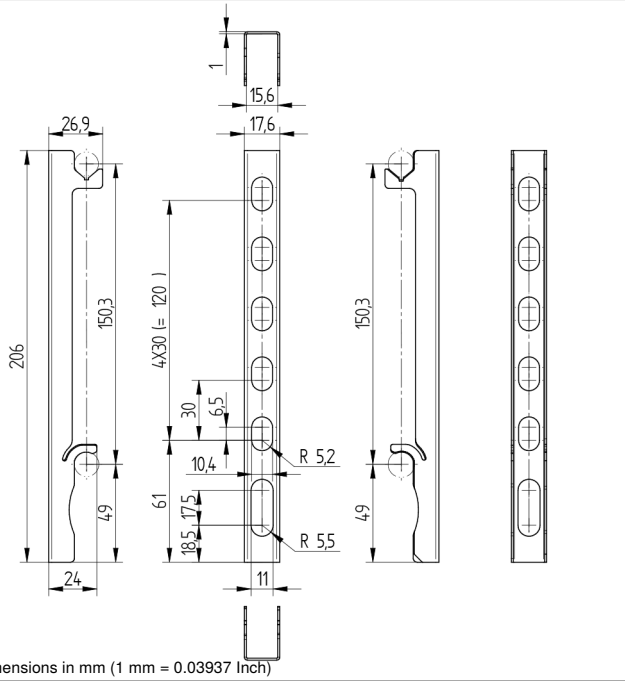

All dimensions in mm (1 mm = 0.03937 Inch)

Specifications are subject to change without notice V0-02.06.2023