Product data sheet

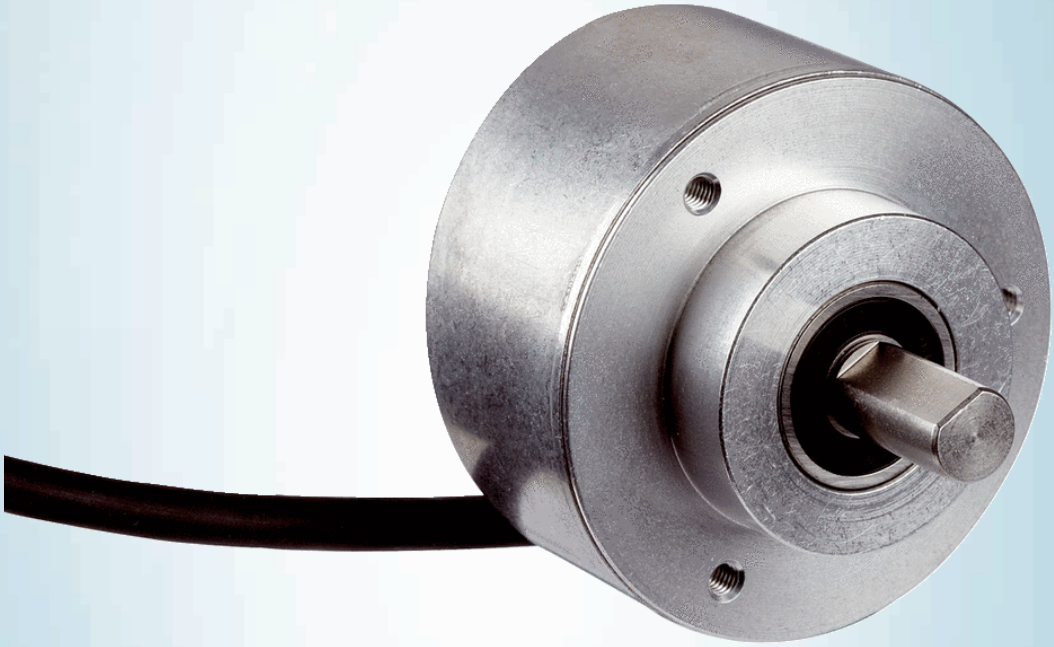

# DFS60B-S4AL03648

## DFS60

INCREMENTAL ENCODERS

SICK
Sensor Intelligence.

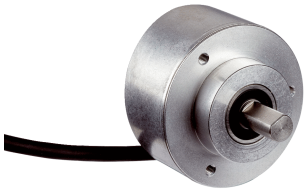

Illustration may differ

## Ordering information

| Type | Part no. |
|---|---|
| DFS60B-S4AL03648 | 1058543 |

Other models and accessories → www.sick.com/DFS60

## Detailed technical data

### Safety-related parameters

| | |
|---|---|
| **$MTTF_D$ (mean time to dangerous failure)** | 300 years (EN ISO 13849-1) [1] |

[1] This product is a standard product and does not constitute a safety component as defined in the Machinery Directive. Calculation based on nominal load of components, average ambient temperature 40 °C, frequency of use 8760 h/a. All electronic failures are considered hazardous. For more information, see document no. 8015532.

### Performance

| | |
|---|---|
| **Pulses per revolution** | 3,648 [1] |
| **Measuring step** | 90°, electric/pulses per revolution |
| **Measuring step deviation at non binary number of lines** | ± 0.01° |
| **Error limits** | ± 0.05° |

[1] See maximum revolution range.

### Interfaces

| | |
|---|---|
| **Communication interface** | Incremental |
| **Communication Interface detail** | TTL / RS-422 |
| **Number of signal channels** | 6-channel |
| **Initialization time** | 40 ms |
| **Output frequency** | ≤ 600 kHz |
| **Load current** | ≤ 30 mA |
| **Operating current** | 40 mA (without load) |

### Electronics

| | |
|---|---|
| **Connection type** | Cable, 8-wire, universal, 3 m [1] |
| **Supply voltage** | 4.5 ... 5.5 V |
| **Reference signal, number** | 1 |
| **Reference signal, position** | 90°, electric, logically gated with A and B |
| **Short-circuit protection of the outputs** | ✓ [2] |

[1] The universal cable connection is positioned so that it is possible to lay it without bends in a radial or axial direction.
[2] Short-circuit opposite to another channel, US or GND permissable for maximum 30 s.

## Mechanics

| | |
|---|---|
| **Mechanical design** | Solid shaft, face mount flange |
| **Shaft diameter** | 10 mm<br>With face |
| **Shaft length** | 19 mm |
| **Weight** | + 0.3 kg |
| **Shaft material** | Stainless steel |
| **Flange material** | Aluminum |
| **Housing material** | Aluminum die cast |
| **Start up torque** | 0.5 Ncm (+20 °C) |
| **Operating torque** | 0.3 Ncm (+20 °C) |
| **Permissible shaft loading** | 80 N (radial)<br>40 N (axial) |
| **Operating speed** | ≤ 9,000 $min^{-1}$ [1] |
| **Moment of inertia of the rotor** | 6.2 $gcm^2$ |
| **Bearing lifetime** | 3.6 x 10^10 revolutions |
| **Angular acceleration** | ≤ 500,000 $rad/s^2$ |

[1] Allow for self-heating of 3.3 K per 1,000 rpm when designing the operating temperature range.

## Ambient data

| | |
|---|---|
| **EMC** | According to EN 61000-6-2 and EN 61000-6-3 |
| **Enclosure rating** | IP67, housing side, cable connection (IEC 60529)<br>IP65, shaft side (IEC 60529) |
| **Permissible relative humidity** | 90 % (Condensation not permitted) |
| **Operating temperature range** | –40 °C ... +100 °C [1]<br>–30 °C ... +100 °C [2] |
| **Storage temperature range** | –40 °C ... +100 °C, without package |
| **Resistance to shocks** | 70 g, 6 ms (EN 60068-2-27) |
| **Resistance to vibration** | 30 g, 10 Hz ... 2,000 Hz (EN 60068-2-6) |

[1] Stationary position of the cable.
[2] Flexible position of the cable.

## Classifications

| | |
|---|---|
| **ECLASS 5.0** | 27270501 |
| **ECLASS 5.1.4** | 27270501 |
| **ECLASS 6.0** | 27270590 |
| **ECLASS 6.2** | 27270590 |
| **ECLASS 7.0** | 27270501 |
| **ECLASS 8.0** | 27270501 |
| **ECLASS 8.1** | 27270501 |
| **ECLASS 9.0** | 27270501 |
| **ECLASS 10.0** | 27270501 |
| **ECLASS 11.0** | 27270501 |
| **ECLASS 12.0** | 27270501 |

| | |
|---|---|
| **ETIM 5.0** | EC001486 |
| **ETIM 6.0** | EC001486 |
| **ETIM 7.0** | EC001486 |
| **ETIM 8.0** | EC001486 |
| **UNSPSC 16.0901** | 41112113 |

## Dimensional drawing (Dimensions in mm (inch))

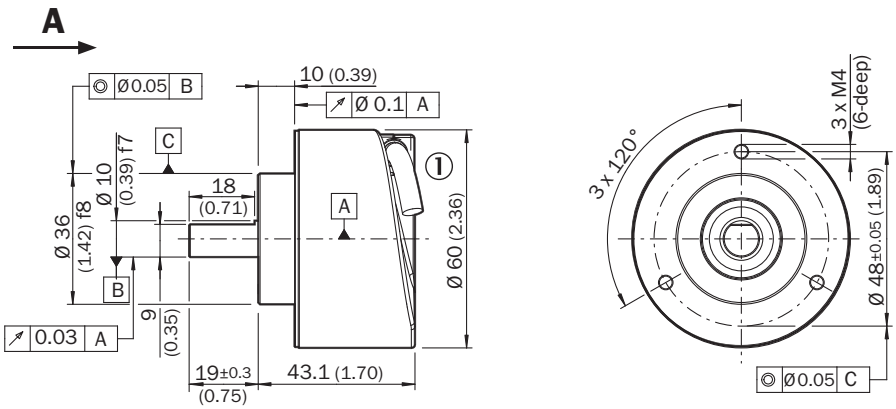


① Cable diameter = 5.6 mm +/- 0.2 mm bend radius = 30 mm

## PIN assignment

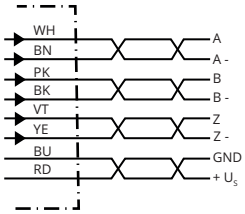


| PIN<br>Male connector M12, 8-pin | PIN<br>Male connector M23, 12-pin | Wire colors (cable connection) | TTL/HTL signal | Sin/Cos 1.0 $V_{PP}$ | Explanation |
|---|---|---|---|---|---|
| 1 | 6 | Brown | $\overline{A}$ | COS- | Signal wire |
| 2 | 5 | White | A | COS+ | Signal wire |
| 3 | 1 | Black | $\overline{B}$ | SIN- | Signal wire |
| 4 | 8 | Pink | B | SIN+ | Signal wire |
| 5 | 4 | Yellow | $\overline{Z}$ | $\overline{Z}$ | Signal wire |
| 6 | 3 | Purple | Z | Z | Signal wire |
| 7 | 10 | Blue | GND | GND | Ground connection |
| 8 | 12 | Red | $+U_S$ | $+U_S$ | Supply voltage |
| - | 9 | - | N.c. | N.c. | Not assigned |
| - | 2 | - | N.c. | N.c. | Not assigned |
| - | 11 | - | N.c. | N.c. | Not assigned |

| PIN<br>Male connector M12, 8-pin | PIN<br>Male connector M23, 12-pin | Wire colors (cable connection) | TTL/HTL signal | Sin/Cos 1.0 $V_{PP}$ | Explanation |
|---|---|---|---|---|---|
| - | 7 [1] | Orange | 0-SET [1] | N.c. | Set zero pulse [1] |
| Screen | Screen | Screen | Screen | Screen | Screen connected to housing on encoder side. Connected to ground on control side. |

[1] For electrical interfaces only: M, U, V, W with 0-SET function on PIN 7 on M23 plug. The 0-SET input is used to set the zero pulse to the current shaft position. If the 0-SET input is applied to US for longer than 250 ms after it has previously been open or applied to GND for at least 1,000 ms, the current shaft position is assigned zero pulse signal “Z”.

## Diagrams

Signal outputs

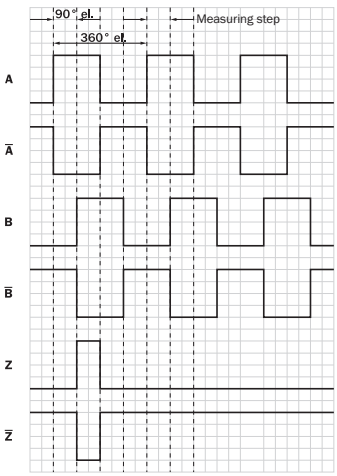


CW with view on the encoder shaft in direction “A”, compare dimensional drawing.

Maximum revolution range

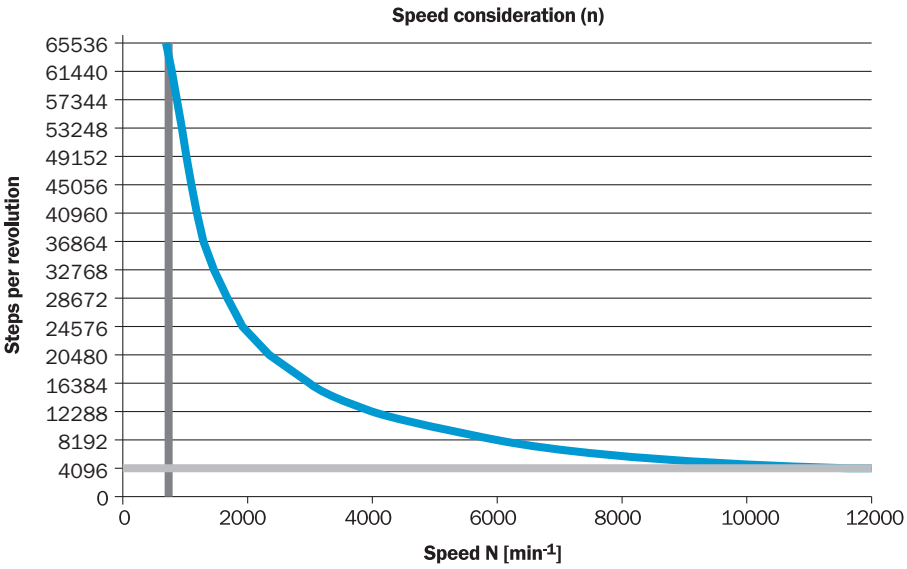

| Supply voltage | Output |
|---|---|
| 4,5 V ... 5,5 V | TTL |
| 10 V ... 32 V | TTL |
| 10 V ... 32 V | HTL |

## Recommended accessories

Other models and accessories ➜ www.sick.com/DFS60

| | Brief description | Type | Part no. |
|---|---|---|---|
| Flanges | | | |
| | • **Description:** Flange adapter, adaptation of face mount flange with 36 mm centering hub to 50 mm servo flange, aluminum, including 3 flat head screws M4 x 10<br>• **Material:** Aluminum<br>• **Details:** Aluminum<br>• **Items supplied:** Including 3 countersunk screws M3 x 10 | BEF-FA-036-050 | 2029160 |
| | • **Description:** Flange adapter, adaptation of face mount flange with 36 mm centering hub to 60 mm square mounting plate, aluminum, including 3 flat head screws M4 x 8<br>• **Material:** Aluminum<br>• **Details:** Aluminum<br>• **Items supplied:** Including 3 countersunk screws M4 x 8 | BEF-FA-036-060REC | 2029162 |
| | • **Description:** Flange adapter, adaptation of face mount flange with 36 mm centering hub to 58 mm square mounting plate with shock absorbers, aluminum<br>• **Material:** Aluminum<br>• **Details:** Aluminum | BEF-FA-036-060RSA | 2029163 |
| | • **Description:** Flange adapter, adaptation of face mount flange with 36 mm centering hub to 63 mm square mounting plate, aluminum, including 3 flat head screws M4 x 10<br>• **Material:** Aluminum<br>• **Details:** Aluminum<br>• **Items supplied:** Including 3 countersunk screws M3 x 10 | BEF-FA-036-063REC | 2034225 |
| | • **Description:** Flange adapter, adaptation of face mount flange with 36 mm centering hub to 100 mm servo flange with 60 mm centering hub, aluminum<br>• **Material:** Aluminum<br>• **Details:** Aluminum | BEF-FA-036-100 | 2029161 |
| Mounting brackets and plates | | | |
| | • **Description:** Mounting bracket for encoder with spigot 36 mm for face mount flange<br>• **Items supplied:** Mounting kit included | BEF-WF-36 | 2029164 |
| | • **Description:** Mounting angle spring-loaded, for flange with centerring collar 36 mm, working temperature range –40° ... +120°C<br>• **Details:** Aluminum | BEF-WF36F | 4084775 |
| Other mounting accessories | | | |
| | • **Description:** Aluminium measuring wheel with O-ring (NBR70) for 10 mm solid shaft, circumference 200 mm | BEF-MR010020R | 2055224 |
| | • **Description:** Aluminium measuring wheel with O-ring (NBR70) for 10 mm solid shaft, circumference 300 mm | BEF-MR010030R | 2049278 |
| | • **Description:** Measuring wheel with O-ring (NBR70) for 10 mm solid shaft, circumference 500 mm | BEF-MR010050R | 2055227 |

| | Brief description | Type | Part no. |
|---|---|---|---|
| | • **Description:** Aluminum measuring wheel with studded polyurethane surface for 6 mm solid shaft, circumference 200 mm | BEF-MR06200APN | 4084747 |
| | • **Description:** Aluminum measuring wheel with cross-knurled surface for 10 mm solid shaft, circumference 200 mm | BEF-MR10200AK | 4084737 |
| | • **Description:** Aluminum measuring wheel with smooth polyurethane surface for 10 mm solid shaft, circumference 200 mm | BEF-MR10200AP | 4084738 |
| | • **Description:** Aluminum measuring wheel with studded polyurethane surface for 10 mm solid shaft, circumference 200 mm | BEF-MR10200APN | 4084739 |
| | • **Description:** Aluminum measuring wheel with cross-knurled surface for 10 mm solid shaft, circumference 500 mm | BEF-MR10500AK | 4084733 |
| | • **Description:** Aluminum measuring wheel with smooth polyurethane surface for 10 mm solid shaft, circumference 500 mm | BEF-MR10500AP | 4084734 |
| | • **Description:** Aluminum measuring wheel with ridged polyurethane surface for 10 mm solid shaft, circumference 500 mm | BEF-MR10500APG | 4084736 |
| | • **Description:** Aluminum measuring wheel with studded polyurethane surface for 10 mm solid shaft, circumference 500 mm | BEF-MR10500APN | 4084735 |
| | • **Description:** SICK modular measuring wheel system for face mount flange encoder with S4 mechanical design (10 mm x 19 mm solid shaft), e.g., DFS60-S4: with O-ring measuring wheel, circumference 200 mm<br>• **Suitable for:** Face mount flange encoder DFS60, DBS60, AFM60, AFS60, mechanical design S4 (solid shaft 10 mm x 19 mm) | BEF-MRS-10-U | 2085714 |
| | • **Description:** Flange adapter (adapts size 60 face mount flange encoder to bearing block with part. no. 2044591) | BEF-FA-036-050-019 | 2063378 |
| | • **Description:** Bearing block for servo and face mount flange encoder. The heavy-duty bearing block is used to absorb very large radial and axial shaft loads. Particularly when using belt pulleys, chain sprockets, friction wheels. Operating speed max. 4,000 rpm^-1, axial shaft load 150 N, radial shaft load 250 N, bearing service life 3.6 x 10^9 revolutions | BEF-FA-LB1210 | 2044591 |
| Shaft adaptation | | | |
| | • **Description:** Bellows coupling, shaft diameter 6 mm / 10 mm, maximum shaft offset: radial ± 0.25 mm, axial ± 0.4 mm, angular +/- 4°; max. speed 10,000 rpm, –30 °C to +120 °C, max. torque 120 Ncm; material: stainless steel bellows, aluminum hub | KUP-0610-B | 5312982 |
| | • **Description:** Double loop coupling, shaft diameter 6 mm / 10 mm, max. shaft offset: radially +/- 2,5 mm, axially +/-3 mm, angle +/- 10 degrees;max. speed 3.000 rpm, –30 to +80 degrees Celsius, torsional spring stiffness of 25 Nm/rad | KUP-0610-D | 5326697 |
| | • **Description:** Spring washer coupling, shaft diameter 6 mm / 10 mm, Maximum shaft offset: radial +/- 0.3 mm, axial +/- 0.4 mm, angular +/- 2.5°; max. speed 12,000 rpm, –10° to +80 °C, max. torque 60 Ncm; material: aluminum flange, glass fiber-reinforced polyamide membrane and hardened steel coupling pin | KUP-0610-F | 5312985 |
| | • **Description:** Claw coupling, shaft diameter 6 mm / 10 mm, damping element 80 shore blue, maximum shaft offset: radial ± 0.22 mm, axial ± 1 mm angular ± 1.3°, max. speed 19,000 rpm, angle of twist max. 10°, –30 °C to +80 °C, max. torque 800 Ncm, tightening torque of screws: ISO 4029 150 Ncm, material: aluminum flange, damping element: polyurethane | KUP-0610-J | 2127056 |

| | Brief description | Type | Part no. |
|---|---|---|---|
| | • **Description:** Bar coupling, shaft diameter 6 mm / 10 mm, max. shaft offset: radial ± 0,3 mm, axial ± 0,3 mm, angular ± 3°; max. speed 10.000 rpm, –10° to +80 °C, max. torque: 80 Ncm, material: fiber-glass reinforced polyamide, aluminum hub | KUP-0610-S | 2056407 |
| | • **Description:** Double loop coupling, shaft diameter 8 mm / 10 mm, max. shaft offset: radially +/- 0,25 mm, axially +/-0,4 mm, angle +/- 4 degrees;max. speed 10.000 rpm, –30 to +120 degrees Celsius, torsional spring stiffness of 150 Nm/rad | KUP-0810-D | 5326704 |
| | • **Description:** Claw coupling, shaft diameter 8 mm / 10 mm, damping element 80 shore blue, maximum shaft offset: radial ± 0.22 mm, axial ± 1 mm angular ± 1.3°, max. speed 19,000 rpm, angle of twist max. 10°, –30 °C to +80 °C, max. torque 800 Ncm, tightening torque of screws: ISO 4029 150 Ncm, material: aluminum flange, damping element: polyurethane | KUP-0810-J | 2128267 |
| | • **Description:** Bar coupling, shaft diameter 8 mm / 10 mm, max. shaft offset: radial ± 0,3 mm, axial ± 0,3 mm, angular ± 3°; max. speed 10.000 rpm, –10° to +80 °C, max. torque: 80 Ncm, material: fiber-glass reinforced polyamide, aluminum hub | KUP-0810-S | 5314178 |
| | • **Description:** Bellows coupling, shaft diameter 10 mm/10 mm; maximum shaft offset: radial +/- 0.25 mm, axial +/- 0.4 mm, angular +/- 4°; max. revolutions 10,000 rpm, –30° to +120 °C, max. torque 120 Ncm; material: stainless steel bellows, aluminum clamping hubs | KUP-1010-B | 5312983 |
| | • **Description:** Double loop coupling, shaft diameter 10 mm / 10 mm, Maximum shaft offset: radial +/- 2.5 mm, axial +/- 3 mm, angular +/- 10°; max. speed 3,000 rpm, –30° to +80 °C, max. torque 1.5 Nm; material: polyurethane, galvanized steel flange | KUP-1010-D | 5326703 |
| | • **Description:** Spring washer coupling, shaft diameter 10 mm / 10 mm, maximum shaft offset, radial ± 0.3 mm, axial ± 0.4 mm, angle ± 2.5°, torsion spring stiffness 30 Nm/rad; material: aluminum flange, glass-fiber reinforced polyamide membrane and hardened steel coupling pin | KUP-1010-F | 5312986 |
| | • **Description:** Claw coupling, shaft diameter 10 mm / 10 mm, damping element 80 shore blue, maximum shaft offset: radial ± 0.22 mm, axial ± 1 mm angular ± 1.3°, max. speed 19,000 rpm, angle of twist max. 10°, –30 °C to +80 °C, max. torque 800 Ncm, tightening torque of screws: ISO 4029 150 Ncm, material: aluminum flange, damping element: polyurethane | KUP-1010-J | 2127054 |
| | • **Description:** Bar coupling, shaft diameter 10 mm / 10 mm; maximum shaft offset: radial ±0.3 mm, axial ± 0.2 mm, angular ± 3°; speed 10,000 rpm, –10° to +80° Celsius, max. torque 80 Ncm; material: glass fiber-reinforced polyamide, aluminum hub | KUP-1010-S | 2056408 |
| | • **Description:** 10 mm / 12 mm; maximum shaft offset: radial +/- 0.25 mm, axial +/- 0.4 mm, angular +/- 4°; max. revolutions 10,000 rpm, –30° to +120 °C, max. torque 120 Ncm; material: stainless steel bellows, aluminum clamping hubs | KUP-1012-B | 5312984 |
| | • **Description:** Double loop coupling, shaft diameter 10 mm / 12 mm, Maximum shaft offset: radial +/- 2.5 mm, axial +/- 3 mm, angular +/- 10°; max. speed 3,000 rpm, –30° to +80 °C, max. torque 1.5 Nm; material: polyurethane, galvanized steel flange | KUP-1012-D | 5326702 |
| | • **Description:** Claw coupling, shaft diameter 10 mm / 12 mm, damping element 80 shore blue, maximum shaft offset: radial ± 0.22 mm, axial ± 1 mm angular ± 1.3°, max. speed 19,000 rpm, angle of twist max. 10°, –30 °C to +80 °C, max. torque 800 Ncm, tightening torque of screws: ISO 4029 150 Ncm, material: aluminum flange, damping element: polyurethane | KUP-1012-J | 2128265 |
| Others | | | |
| | • **Connection type head A:** Male connector, M12, 8-pin, straight, A-coded<br>• **Signal type:** Incremental<br>• **Cable:** CAT5, CAT5e<br>• **Description:** Incremental, shielded, Head A: male connector, M12, 8-pin, straight, A coded, shielded, for cable diameter 4 mm ... 8 mm Head B: - Operating temperature: –40 °C ... +85 °C<br>• **Connection systems:** IDC quick connection<br>• **Permitted cross-section:** 0.14 mm² ... 0.34 mm² | STE-1208-GA01 | 6044892 |

| | Brief description | Type | Part no. |
|---|---|---|---|
| | • **Connection type head A:** Female connector, JST, 8-pin, straight<br>• **Connection type head B:** Flying leads<br>• **Signal type:** SSI, Incremental<br>• **Items supplied:** JST including sealing<br>• **Cable:** 3 m, 8-wire, PUR, halogen-free<br>• **Description:** SSI, Incremental, shielded | DOL-0J08-G3M0AA6 | 2048591 |
| | • **Connection type head A:** Female connector, JST, 8-pin, straight<br>• **Connection type head B:** Flying leads<br>• **Signal type:** SSI, Incremental<br>• **Items supplied:** JST including sealing<br>• **Cable:** 1.5 m, 8-wire, PUR, halogen-free<br>• **Description:** SSI, Incremental, shielded | DOL-0J08-G1M5AA6 | 2048590 |
| | • **Connection type head A:** Female connector, JST, 8-pin, straight<br>• **Connection type head B:** Flying leads<br>• **Signal type:** Incremental, SSI<br>• **Items supplied:** JST including sealing<br>• **Cable:** 0.5 m, 8-wire, PUR, halogen-free<br>• **Description:** Incremental, SSI, shielded, Head A: female connector, JST, 8-pin, straight Head B: cable Cable: incremental, suitable for drag chain, PUR, halogen-free, shielded, 4 x 2 x 0.15 mm², Ø 5.6 mm | DOL-0J08-G0M5AA3 | 2046873 |
| | • **Connection type head A:** Female connector, JST, 8-pin, straight<br>• **Connection type head B:** Flying leads<br>• **Signal type:** Incremental, SSI<br>• **Items supplied:** JST including sealing<br>• **Cable:** 5 m, 8-wire, PUR, halogen-free<br>• **Description:** Incremental, SSI, shielded, Head A: female connector, JST, 8-pin, straight Head B: cable Cable: incremental, suitable for drag chain, PUR, halogen-free, shielded, 4 x 2 x 0.15 mm², Ø 5.6 mm | DOL-0J08-G05MAA3 | 2046876 |
| | • **Connection type head A:** Female connector, JST, 8-pin, straight<br>• **Connection type head B:** Flying leads<br>• **Signal type:** Incremental, SSI<br>• **Items supplied:** JST including sealing<br>• **Cable:** 10 m, 8-wire, PUR, halogen-free<br>• **Description:** Incremental, SSI, shielded, Head A: female connector, JST, 8-pin, straight Head B: cable Cable: incremental, suitable for drag chain, PUR, halogen-free, shielded, 4 x 2 x 0.15 mm², Ø 5.6 mm | DOL-0J08-G10MAA3 | 2046877 |
| | • **Connection type head A:** Male connector, M23, 12-pin, straight, A-coded<br>• **Signal type:** HIPERFACE®, SSI, Incremental<br>• **Description:** HIPERFACE®, SSI, Incremental, shielded, M23 female connector with central fixing ( for cabinet bushing )<br>• **Connection systems:** Solder connection | STE-2312-GX | 6028548 |
| | • **Connection type head A:** Male connector, M23, 12-pin, straight, A-coded<br>• **Signal type:** HIPERFACE®, SSI, Incremental<br>• **Description:** HIPERFACE®, SSI, Incremental, shielded, Head A: male connector, M23, 12-pin, straight, for cable diameter 5.5 mm ... 10.5 mm Head B: - Operating temperature: –40 °C ... +125 °C<br>• **Connection systems:** Solder connection | STE-2312-G01 | 2077273 |
| | • **Connection type head A:** Female connector, JST, 8-pin, straight<br>• **Connection type head B:** Male connector, M23, 12-pin, straight<br>• **Signal type:** Incremental<br>• **Cable:** 0.35 m, 8-wire, PUR, halogen-free<br>• **Description:** Incremental, shielded, Head A: female connector, JST, 8-pin, straight Head B: male connector, M23, 12-pin, straight Cable: suitable for drag chain, PUR, halogen-free, shielded, 4 x 2 x 0.15 mm², Ø 5.6 mm | STL-2312-GM35AA3 | 2061621 |
| | • **Connection type head A:** Female connector, JST, 8-pin, straight<br>• **Connection type head B:** Male connector, M23, 12-pin, straight<br>• **Signal type:** Incremental<br>• **Cable:** 1 m, 8-wire, PUR, halogen-free<br>• **Description:** Incremental, shielded, Head A: female connector, JST, 8-pin, straight Head B: male connector, M23, 12-pin, straight Cable: suitable for drag chain, PUR, halogen-free, shielded, 4 x 2 x 0.15 mm², Ø 5.6 mm | STL-2312-G01MAA3 | 2061622 |

| | Brief description | Type | Part no. |
|---|---|---|---|
| | • **Connection type head A:** Female connector, JST, 8-pin, straight<br>• **Connection type head B:** Male connector, M23, 12-pin, straight<br>• **Signal type:** Incremental<br>• **Cable:** 2 m, 8-wire, PUR, halogen-free<br>• **Description:** Incremental, shielded, Head A: female connector, JST, 8-pin, straight Head B: male connector, M23, 12-pin, straight Cable: suitable for drag chain, PUR, halogen-free, shielded, 4 x 2 x 0.15 mm², Ø 5.6 mm | STL-2312-G02MAA3 | 2061504 |

# SICK AT A GLANCE

SICK is one of the leading manufacturers of intelligent sensors and sensor solutions for industrial applications. A unique range of products and services creates the perfect basis for controlling processes securely and efficiently, protecting individuals from accidents and preventing damage to the environment.

We have extensive experience in a wide range of industries and understand their processes and requirements. With intelligent sensors, we can deliver exactly what our customers need. In application centers in Europe, Asia and North America, system solutions are tested and optimized in accordance with customer specifications. All this makes us a reliable supplier and development partner.

Comprehensive services complete our offering: SICK LifeTime Services provide support throughout the machine life cycle and ensure safety and productivity.

**For us, that is "Sensor Intelligence."**

# WORLDWIDE PRESENCE:

Contacts and other locations –www.sick.com



SICK
Sensor Intelligence.